Rubine™

ITALIA

RBO-AVATA2-70SS

INSTRUCTION MANUAL

Built-In Oven

ACKNOWLEDGMENT

Thank you for purchasing our product. We hope you enjoy using the many features and benefits it provides. Before using this product please study this entire Instruction Manual carefully. Keep this manual in a safe place for future reference. Ensure that other people using the product are familiar with these instructions as well.

WARNING

- When the oven is first switched on, it may give off an unpleasant smell. This is due to the bonding agent used for the insulating panels within the oven. This is completely normal, if it does occur, you merely have wait for the smell to clear before putting food into the oven.
- The appliance and its accessible parts become hot during use. Care should be taken to avoid touching heating elements.
- Children less than 8 years of age shall be kept away unless continuously supervised.
- This appliance can be used by children aged from 8 years and above and persons with reduced physical, sensory or mental capabilities or lack of experience and knowledge if they have been given supervision or instruction concerning use of the appliance in a safe way and understand the hazards involved. Children shall not play with the appliance. Cleaning and user maintenance shall not be made by children without supervision.
- Do not use harsh abrasive cleaners or sharp metal scrapers to clean the glass of the oven. This can scratch the surface and may result in permanent damage to the glass.
- During use, the appliance becomes very hot. Care should be taken to avoid touching heating elements inside the oven.
- Do not allow children to go near the oven when it is operating, especially when the grill is on.
- Ensure that the appliance is switched off before replacing the oven lamp to avoid the possibility of electric shock.
- The means for disconnection must be incorporated in the fixed wiring in accordance with the wiring specifications.
- During pyrolytic cleaning, accessible parts may become hotter than normal. Young children should be kept away.
- Children should be supervised to ensure that they do not play with the appliance.
- This appliance is not intended for use by persons (including children) with reduced physical, sensory or mental capabilities, or lack of experience and knowledge, unless they have been given supervision or instruction concerning use of the appliance by person responsible for their safety.

SAFETY HINTS

- Do not use the oven unless you are wearing something on your feet. Do not touch the oven with wet or damp hands or feet.
- For oven: Oven door should not be opened often during the cooking period.
- The appliance must be installed by an authorized technician and put into use. The producer is not responsible for any damage that might be caused by defective placement, and installation by unauthorized personnel.
- When the door or drawer of oven is open do not leave anything on it, you may unbalance your appliance or break the door.
- Some parts of appliance may keep its heat for a long time; it is required to wait for it to cool down before touching onto the points that are exposed to the heat directly.
- If you will not use the appliance for a long time, it is advised to plug if off.
- If the supply cord is damaged, it must be replaced by the manufacturer, its service agent or similarly qualified persons in order to avoid a hazard.
- Excess spillage must be removed before cleaning and shall specify which utensils can be left in the oven during cleaning.
- Only use the temperature probe recommended for this oven. A steam cleaner is not to be used.

FITTING THE OVEN INTO THE KITCHEN UNIT

Fit the oven into the space provided in the kitchen unit; it may be fitted underneath a work top or into an upright cupboard. Fix the oven in position by screwing into place, using the two fixing holes in the frame. To locate the fixing holes, open the oven door and look inside. To allow adequate ventilation, the measurements and distances adhered to when fixing the oven.

IMPORTANT

If the oven is to work properly, the kitchen housing must be suitable. The panels of the kitchen unit that are next to the oven must be made of a heat resistant material. Ensure that the glues of units that are made of veneered wood can with stand temperatures of at least 120ºC. Plastics or glues that can not withstand such temperatures will melt and deform the unit, once the oven has been lodged inside the units, electrical parts must be completely insulated. This is a legal safety requirement. All guards must be firmly fixed into place so that it is impossible to remove them without using special tools. Remove the back of the kitchen unit to ensure an adequate current of air circulates around the oven. The hob must have a rear gap of at least 45 mm.

DECLARATION OF COMPLIANCE

When you have unpacked the oven, make sure that it has not been damaged in any way. If you have any doubts at all, do not use it: contact a professionally qualified person. Keep packing materials such as plastic bags, polystyrene, or nails out of the reach of children because these are dangerous to children.

PRODUCT DESCRIPTION

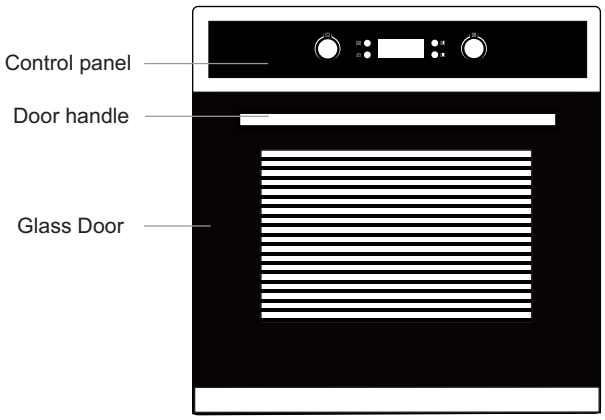

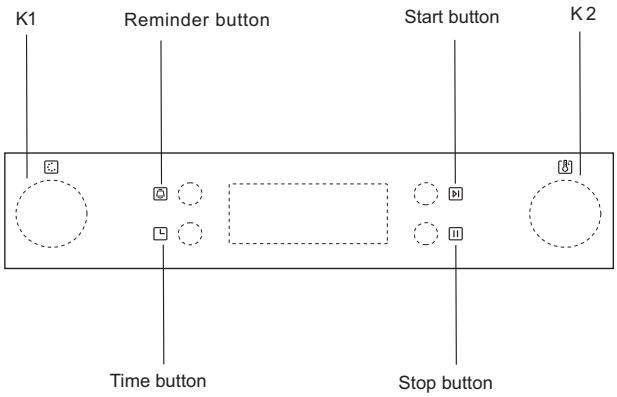

Symbol	Function description
	Oven Lamp: which enables the user to observe the progress of cooking without opening the door.
	Defrost: The circulation of air at room temperature enables quicker thawing of frozen food, (without the use of any heat).
	Bottom heat: A concealed heating element in the bottom of the oven provides a more concentrative heat to the base of food without browing. This is ideal for slow cooking dishes such as casseroles, stews, pastries and pizzas where a crispy base is desired. The temperature can be set within the range of 60-120°C. The default temperature is 60°C.
	Conventional cooking: The top and bottom heating element work together to provide convectional cooking. The temperature can be set within the range of 50-250°C. The default temperature is 220 C. This is optional function that can be work with rotisserie motor.
	Conventional with fan: Combination of the fan and both heating element provides more even heat penetration,saving up to 30-40% of energy consumption. Dishes are lightly browned on the outside and still moist on the inside. Note:This function is suitable for grilling or roasting big pieces of meat at a higher temperature. The temperature can be set within the range of 50-250°C. The default temperature is 220°C.
	Grill: The inner grill element switches on and off to maintain temperature. The temperature can be set within the range of 180-240°C.The default temperature is 210°C. This is optional function that can be work with rotisserie motor.
	Big grill: The inner grill element and top heating element are working. The temperature can be set within the range of 180-240°C. The default temperature is 210°C.
	Big grill with fan: The inner grill element and top heating element are working with fan. The temperature can be set within the range of 180-240°C. The default temperature is 210°C.
	Turbo: An element around the convection fan provides an additional source of heat for convection style cooking. In this mode the fan automatically comes on to improve air circulation within the oven and creates an even heat for cooking. The temperature can be set within the range of 50-240°C. The default temperature is 180°C.

OPERATION INSTRUCTIONS

1. Clock Setting

When the oven is connected to the power, the symbols 00:00 will be visible on the display.

1) Press " ", the hour figures will flash.

2) Rotate " K2" to adjust the hour figures, (Time should be within 0--23).

3) Press " ", the minutes will flash.

4) Rotate "K2 " to adjust the minutes setting, (time should be within 0-59).

5) Press " " to finish the clock settings. ":" will flash, and the time will be illuminated.

Note: The clock is 24 hours. After connected to the mains power, the clock will untimed.

2. Function Setting

1) Rotate " K1 " to choose the cooking function you require .The related indicator will illuminated .

2) Rotate " K2 " to adjust the temperature.

3) Press " " to confirm the start of cooking. The corresponding icon for temperature" ℃"will be on.

4) If step 2 is ignored, Press " " to confirm the start of cooking. and the default time is 9 hours, the default temperature will display on the LED.

NOTE:

1) The step quantities for the adjustment time of the coding switch are as follow:

0--0:30min: step 1 minute 0:30--9:00hour :step 5 minutes

2) The step quantities for the adjustment of temperature is 5°C, and the grill function is 30°C.

3) Rotate " K1" to adjust the cooking time when cooking begins. Then press " " to start cooking. If " " not pressed within 3 seconds,the oven will revert back to the previous time to continue cooking.

4) Rotate"K2 " to adjust the temperature when cooking begins.The related indicator will be illuminated. Then press" " to start cooking. If " " not pressed in 3 seconds, the oven will revert back to the previous temperature to continue cooking.

3.Lamp Setting

1) Rotate"K1" to select the relevant function, then the corresponding icon will be on.

2) Press " " button to start cooking. Lamp icon" " *" : "will flash.

4.Inquiring function

During cooking process, you can use inquiring function, after 3 seconds return to the current working state.

1) During cooking mode, press " " button to see the current time.

2) If the clock was set, press " "button to ask for cooking time.

5. Child-lock function

To Lock : press " " and " " simultaneously for 3 seconds, there will be a long "beeping" sound indicating the child-lock is on and the " " will be illuminated.

Lock quitting : press " " and " " simultaneously for 3 seconds, there will be a long "beeping" sound indicating the child-lock is released.

Note: During working mode, if you want to stop cooking,press stop button quickly. Do not need to long pressing on stop button,it is invalid.

6. Reminder Function:

The oven has 9 hours reminder, this function will help to remind you to start cooking in a certain time from 1 minute to 9 hours. Only when oven in standby mode, the reminder can be set. Follow below to set the reminder:

1) Press reminder setting button " ";
2) Rotate " K2 " to set the hour time of reminder. (Time should be within 0--9).
3) Press reminder setting button " " again;
4) Rotate "K2 " to set minute time of reminder. (Time should be within 0--59).
5) Press " " to confirm setting. ":" will flash and the indicator for reminder " " will light.The time counts down.

Note: The oven buzzer will sound for 10 times after the time back to the zero hour . " "symbol disappears on the screen to remind you to start cooking. You can cancel the reminder during setting by pressing the stop button; After the reminder has been set, you can cancel it by pressing stop button twice.

7. Start/Pause/Cancel Function

1) If the cooking time has been set, press " " to start cooking. If the cooking is paused, press " " to resume cooking.
2) During cooking process, press " " once to pause the cooking. Press " " twice to cancel the cooking.

8. Energy-Saving Function

1) During in waiting state and reminding state , press " " for three seconds, the LED display will go off and set to energy-saving mode.
2) If no operation in10 minutes under waiting state, the LED display will go off and go into energy-saving mode.
3) Under the energy-saving mode, press any key or rotate any encoder can quit the energy-saving mode.

9. Meat probe function:

1) In waiting state, insert the meat probe, the LED will display " PROB" and the icon " "will light.
2) Rotate “K1 ” to choose function you need. The related indicator will illuminated.
Functional sequence diagram: . Press " " to confirm function setting.
3) Rotate "K2" to adjust the temperature. Press " " to confirm temperature probe.
The small LED display the temperature and the big LED display " PROB".
4>The buzzer will sound five times when cooking finish. The setting temperature lights when the setting temperature achieved. If the meat probe pulled out, it will turn back to waiting state and the time displays.
Note: A). The range of the temperature is 50-150 degrees. B).During in probe function, the cooking time can not be set. C) During cooking process,press stop button once, it will stop cooking, LED flash; Press stop button again, cancel the current cooking. D)Before insert or pull out the meat probe from the oven,it will cancel all the program. E)If the display shows "Er-3" after the programme has been started, it means that the temperature sensor short circuit.

10. Note

1) The oven lamp will be on for all functions.
2) Once the cooking programme has been set and the" " button is not pressed within 5 minutes, the current time will be displayed or turn back to waiting state. The setting program will be invalid.
3) The buzzer sounds when effectively pressed, otherwise there will be no response.
4) The buzzer will sound five times to remind you when cooking has finished.

ACCESSORIES

Wire shelf : For grill dishes, cake pan with items for roasting and grilling.

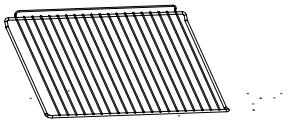

Slider bracket : These shelf support rails on the right and left sides of the oven can be removed for cleaning oven walls.

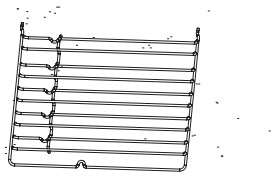

Universal pan: For cooking large quantities of food such as moist cakes, pastries, frozen food etc,or for collecting fat spillage and meat juices.

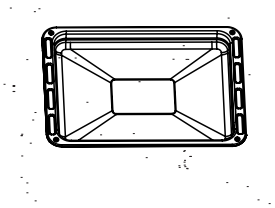

SHELF PLACEMENT WARNING:

To ensure the oven shelves operate safely, correct placement of the shelves between the side rails is imperative. This will ensure that during careful removal of the shelf or tray, hot food items should not slide out.

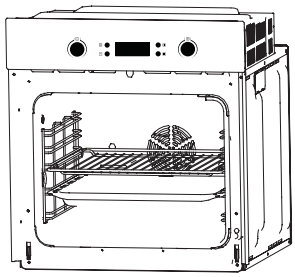

USE OF ROTISSERIE ACCESSORIES

The rotisserie works in combination with the grill element to heat the food equally. At the same time, it can guarantee the nutrition of the food.

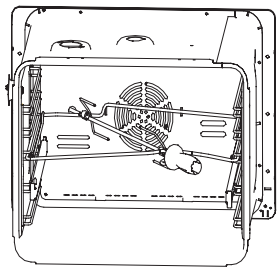

BULB REPLACEMENT

For replacement, process as below:

1) Disconnect power from the mains outlet or switch off the circuit breaker of the unit's mains outlet.
2) Unscrew the glass lamp cover and replace the bulb with a new one of the same type.
3) Screw the glass lamp cover back in place.

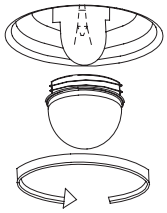

SECURING THE OVEN TO THE CABINET

1) Fit oven into the cabinet hole.
2) Open the oven door.
3) Secure the oven to the kitchen cabinet with two distance holders "A" which fit the holes in the oven frame and fit the two wood screws "B".

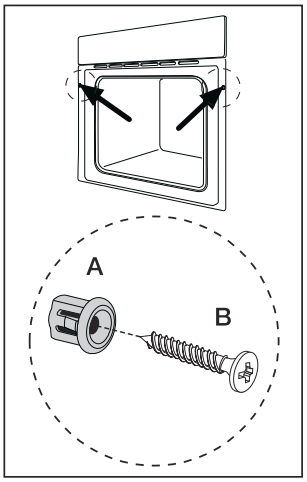

CONNECTION OF THE OVEN

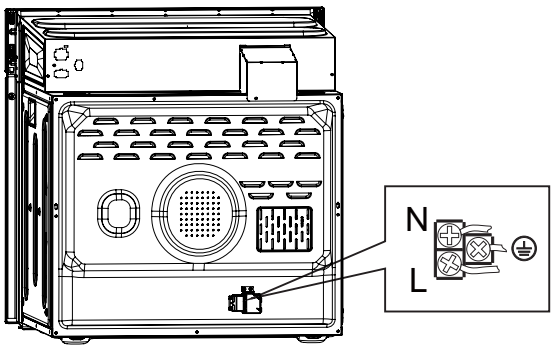

INSTALLATION

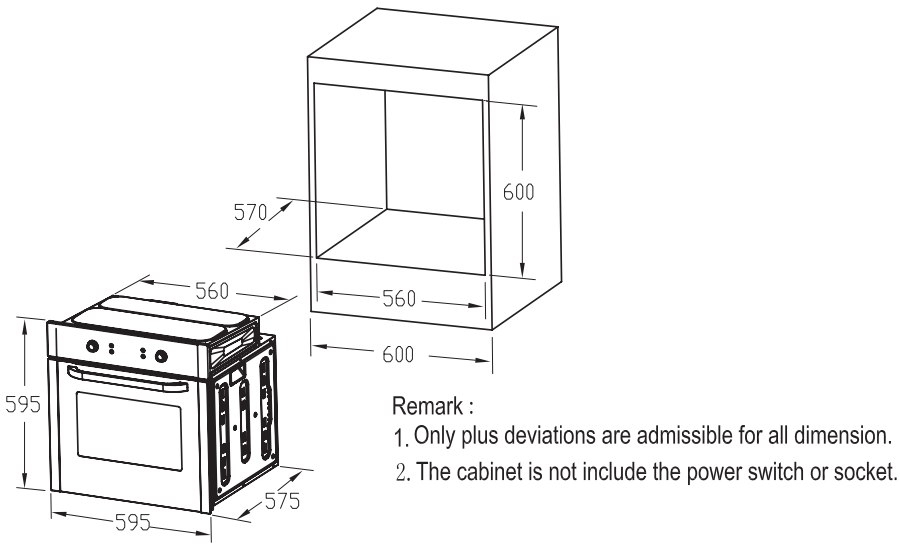

NOTE: The number of a accessories included depends on the particular appliance purchased.

CLEANING AND MAINTENANCE

For the sake of a good appearance and reliability, keep the unit clean. The modern design of the unit facilitates maintenance to a minimum. The parts of the unit which come into contact with food have to be cleaned regularly.

- Before any maintenance and cleaning, disconnect the power.
- Set all controls in the OFF position.
- Cleaning is easier when the unit is slightly warm.
- Clean the surface of the unit with a damp cloth, soft brush or fine sponge and then wipe dry. In case of heavy soiling, use hot water with non- abrasive cleaning product.
- For cleaning the glass of the oven door,do not use abrasive cleaners or sharp metal scrapers, these can scratch the surface or lead to the glass being damaged.
- Never leave acidic substances (lemon juice, vinegar) on stainless steel parts.
- Do not use a high pressure cleaner for cleaning the unit. The baking pans may be washed in mild detergent.
- A steam cleaner is not to be used.

This appliance is marked according to the European directive 2002/96/EC on Waste Electrical and Electronic Equipment(WEEE).

By ensuring this product is disposed correctly, you will help prevent potential negative consequences for the environment and human health,which could otherwise be caused by inappropriate waste handling of this product. The symbol on the product indicates that this product may not be treated as household waste. Instead it shall be handed over to the applicable collection point for the recycling of electrical and electronic equipment. Disposal must be carried out in accordance with local environmental regulations for waste disposal.For more detailed information about treatment, recovery and recycling of this product, please contact your local city office, your household waste disposal service or the shop where you purchased the product.

Specification

Model No.	RBO-AVATA2-70SS
Rated Voltage (V)	220-240V~
Frequency (Hz)	50/60 Hz
Max. Power (KW)	3.0
Cavity Volume (L)	70
Grill Element	2000W
Top Element	950W
Bottom Element	1100W
Convection Heating Element	2000W
Light Bulb	25W
Product LxDxH (mm)	595x575x595
Net Weight (kg)	34.5kg

P/N:291800201151

AFTER-SALES SERVICE
(Including Spare Part Request)
1800-282-093
603-6286 9000

www.rubine.com.my

Fiamma Trading Sdn. Bhd. (330476-P)
9-2, Wisma Fiamma, No. 20, Jalan 7A/62A
Bandar Manjalara, 52200 Kuala Lumpur Malaysia.
Tel: 03-6279 8943 Fax: 03-6279 8988